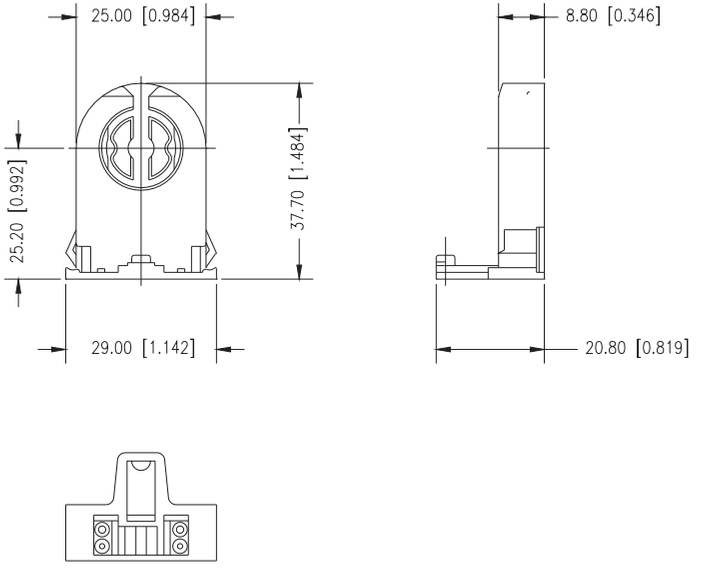

UNIT of MEASURE: MM